RoHS

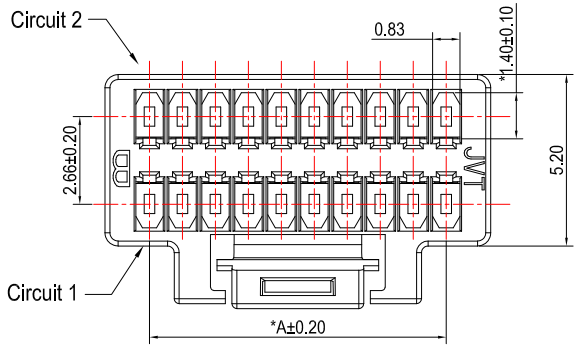

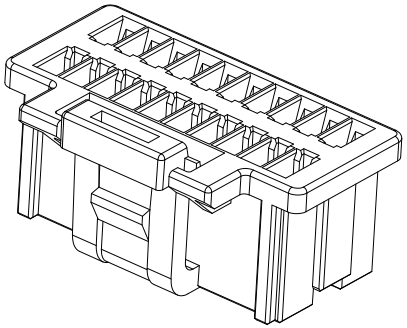

■ ASPECIFICATIONS :

- Voltage Rating:50V AC/DC
- Current Rating:1A AC/DC
- Withstanding Voltage:250V AC/minute
- Temperature Range:-40℃~+105℃
- Insulation Resistance:100MΩ Min.
- Contact Resistance:20mΩ Max.
- Suitable JVT1005T series Terminal
  JVT1005W series Wafer

■ Material:

Material:PA66 UL 94V-0
Color:Natural/Black color

■ Packing specifications:

2~08P 2000pcs/bag
2*10P above 1,000 pcs/bag

- *is the key control size

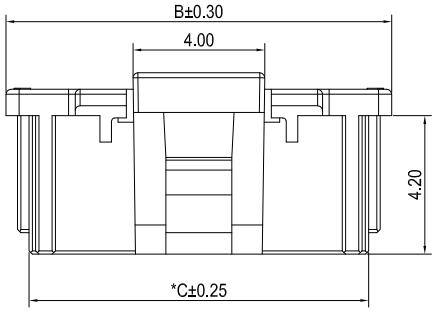

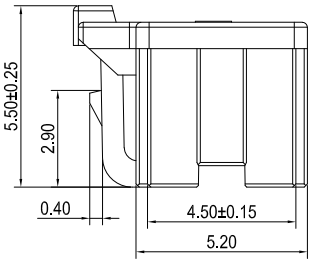

JVT1005HN0-2*XXXXL

- Logo
- Series NO.
- Housing
- N0-PA66 UL94V-0
- Lock
- Blank-Natural colr
- BK-Black
- Pin NO.

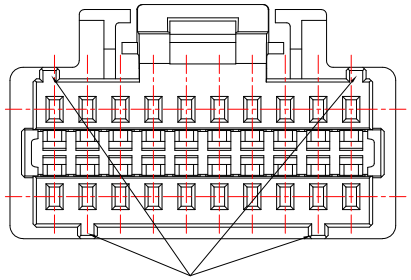

2*10~2*25P 四凸筋

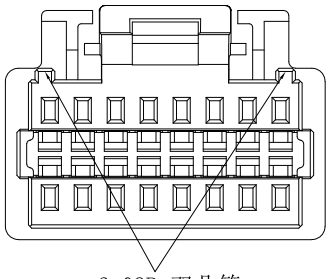

2*08P 双凸筋

东莞市乔业电子有限公司 WWW.JVT.LTD 2022 12 21 工程发行章

Poles	Dimensions (mm)		
	A	B	C
2x08	7.00	9.70	8.30
2x10	9.00	11.70	10.30
2x12	11.00	13.70	12.30
2x14	13.00	15.70	14.30
2x15	14.00	16.70	15.30
2x18	17.00	19.70	18.30
2x20	19.00	21.70	20.30
2x25	24.00	26.70	25.30

Version	Content of change	Date	Signature

GENERAL TOLERANCE
0 ±0.35
.0 ±0.30
.00 ±0.20
.000 ±0.10

JVT 乔业连接器 JVT CONNECTORS

Unit	mm	Scale	1:1	Date	20210922

Approved by	Check	Design	Standard	1.0mm HSG	
LI	CLYDE	LU	P/N	JVT1005HN0-2*XXXXL	
			Map title	031	Version A0