RoHS

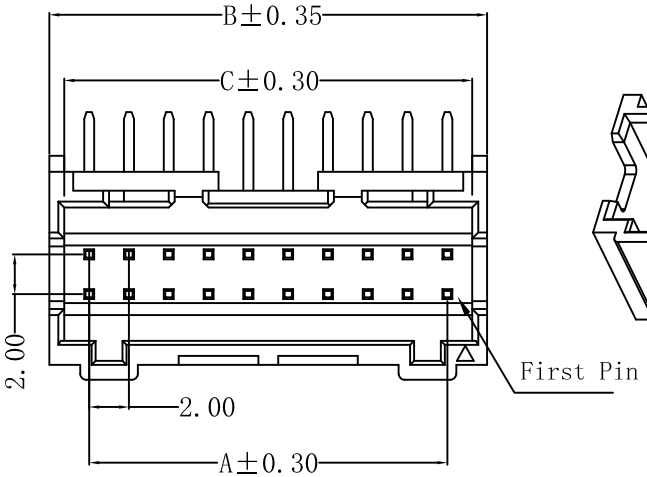

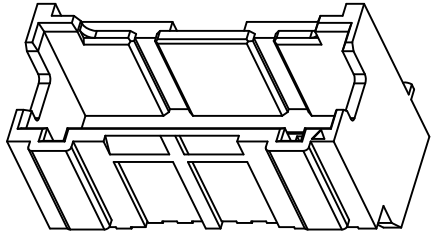

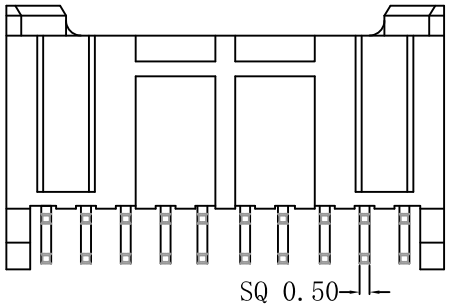

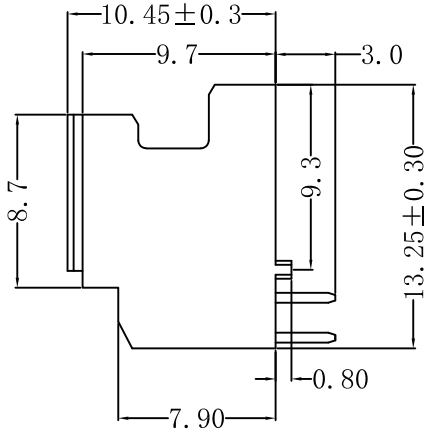

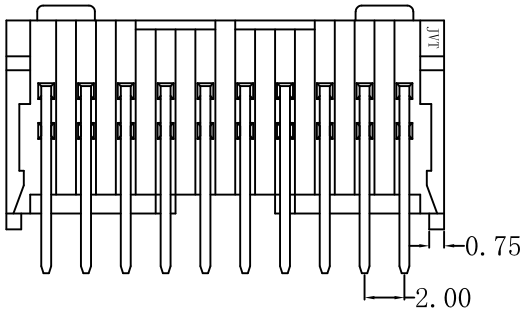

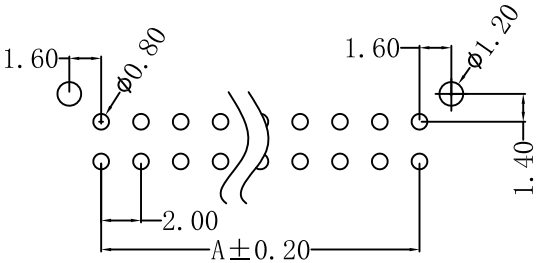

PCB LAYOUT

SPECIFICATION

- Voltage rating: 250V AC, DC
- Current Rating:3A,AC,DC
- Withstand voltage: 800V AC/minute
- Contact resistance: 20mΩ max
- Insulation resistance: 1000MΩ min
- Temperature range: -40° C ~ +105° C

WAFER

- Material:Base, Glass-filled PBT/PA66 UL 94V-0,White
  Pin:Brass Tin-plated
- Mates With Part(s):JVT2038 Crimp HSG and TER
- Q'TY: 500-1000PCS/bag

JVT2038 Crimp Housing and Terminal

JVT2038WXX-2*XXSNWHR-D

- Logo
- Series NO.
- Wafer
- PT-PBT
- NO-PA66
- Pin NO.
- SN-Tin Plated
- White
- R-Right Angle 90°
- DIP

东莞市乔业电子有限公司 WWW.JVT.LTD 2016.02.15 工程发行章

POLES	Dimensions(mm)		
	A	B	C
2*02	2.0	6.0	5.20
2*03	4.0	8.0	7.20
2*04	6.0	10.0	9.20
2*05	8.0	12.0	10.5
2*06	10.0	14.0	12.5
2*07	12.0	16.0	14.5
2*08	14.0	18.0	16.5
2*09	16.0	20.0	18.5
2*10	18.0	22.0	20.5
2*11	20.0	24.0	22.5
2*12	22.0	26.0	24.5
2*13	24.0	28.0	26.5
2*14	26.0	30.0	28.5
2*15	28.0	32.0	30.5
2*16	30.0	34.0	32.5
2*17	32.0	36.0	34.5
2*18	34.0	38.0	36.5
2*19	36.0	40.0	38.5
2*20	38.0	42.0	40.5

Version	Content of change	Date	Signature

GENERAL TOLERANCE
0 ±0.35
.0 ±0.30
.00 ±0.20
.000 ±0.10

JVT 乔业连接器 JVT CONNECTORS

Unit	mm	Scale	1:1	Date	20160215

Approved by	Check	Design	Standard	2.0mm 90° WAFER	
LI	CLYDE	LU	P/N	JVT2038WXX-2*XXSNWHR-D	
			Map title	031	Version A0