RoHS

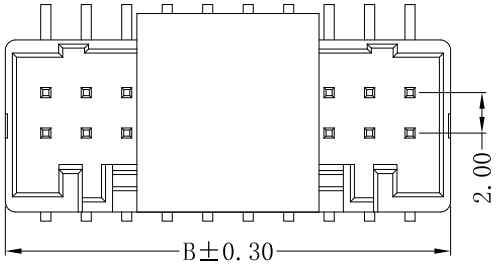

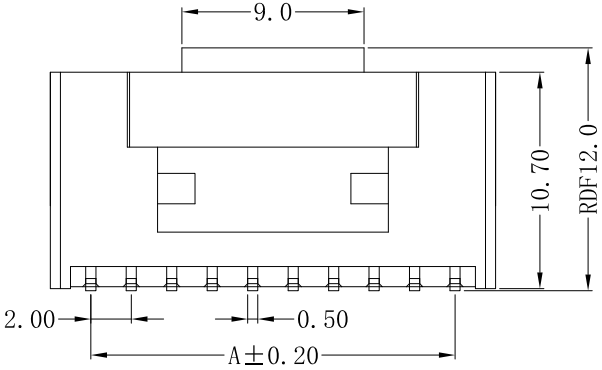

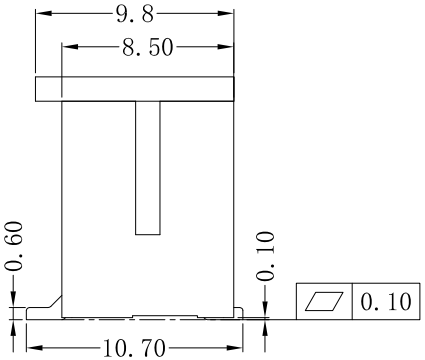

■ SPECIFICATIONS :

- Current Rating :3A AC/DC
- Voltage Rating :250V AC ,DC
- Temperature Range :-40℃ ~+105℃
- Contact Resistance :20mΩMax .
- Insulation Resistance :1000MΩ Min .
- Withstanding Voltage :800V AC /minute

*Suitable JVT2060H series Housing
JVT2060T series Terminal

■ WAFER

- Material: LCP UL 94V-0
- pin: Brass, Tinplated

JVT2060WLP-2*XXSN-S

- Logo
- Series NO.
- W-Wafer
- LP-LCP
- Pin NO.
- S-SMT
- SN-Tin Plated

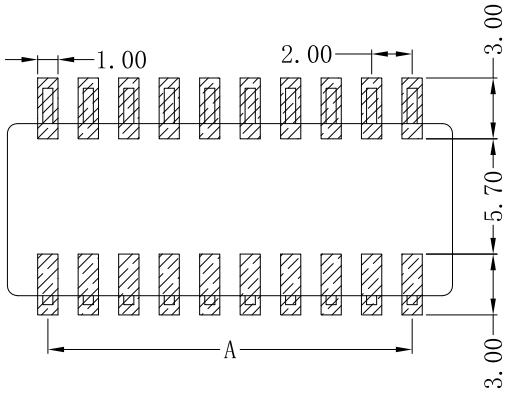

P.C.B LAYOUT

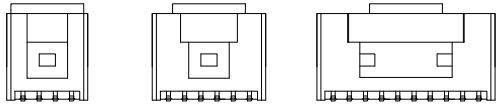

08P~10P 12P~18P 20P~40P

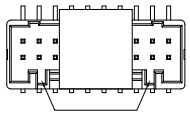

08P~10P Without Guideway
12P~40P Without Guideway

PART No.	Dimensions (mm)	
	A	B
2X04	6.00	10.00
2X05	8.00	12.00
2X06	10.00	14.00
2X07	12.00	16.00
2X08	14.00	18.00
2X09	16.00	20.00
2X10	18.00	22.00
2X11	20.00	24.00
2X12	22.00	26.00
2X13	24.00	28.00
2X14	26.00	30.00
2X15	28.00	32.00
2X16	30.00	34.00
2X17	32.00	36.00
2X18	34.00	38.00
2X19	36.00	40.00
2X20	38.00	42.00

东莞市乔业电子有限公司 WWW.JVT.LTD 2022.05.18 工程发行章

Version	Content of change	Date	Signature

GENERAL TOLERANCE
0 ±0.35
.0 ±0.30
.00 ±0.20
.000 ±0.10

JVT 乔业连接器 JVT CONNECTORS

Unit	mm	Scale	1:1	Date	20220518

Approved by	Check	Design	Standard	2.0mm Double row Wafer SMT		
LI	CLYDE	Lisa	P/N	JVT2060WLP-2*XXSN-S		
			Map title	110	Version A0	Sheet 1 of 2