RoHS

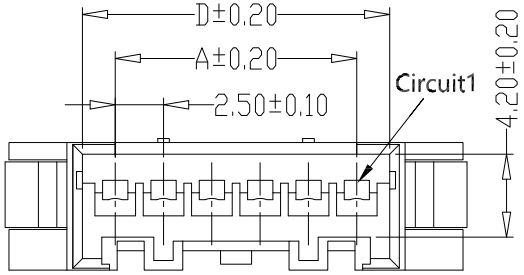

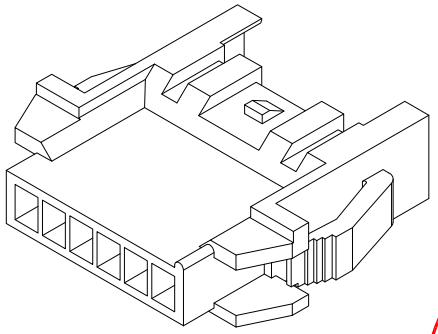

SPECIFICATIONS

- Voltage Rating: 250V AC / DC
- Current Rating: 3A AC / DC
- Withstanding Voltage: 1000V AC/minute
- Temperature Range: -40° C~+105° C
- Insulation Resistance: 1000MΩ Min.
- Contact Resistance: 20mΩ Max.

Material

- Material: PA66 UL 94V-0
- Color:natural color

东莞市乔业电子有限公司 WWW.JVT.LTD 2021.12.01 工程发行章

JVT2508HN0-XXWL-LG

- Logo
- Series NO.
- Housing
- PA66 UL94V-0
- Pin NO.
- W-Female HSG
- L-With wings
- LG-Long

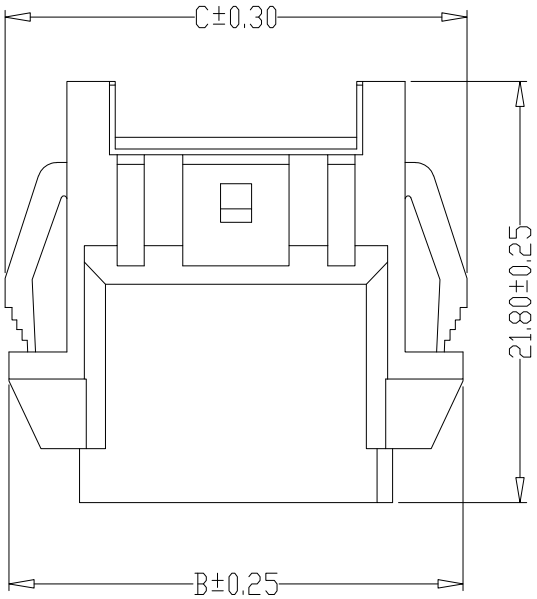

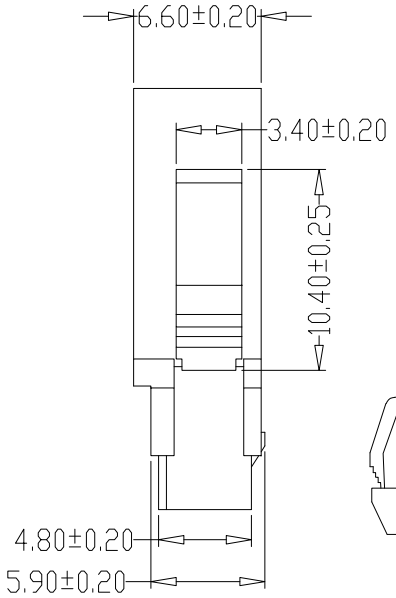

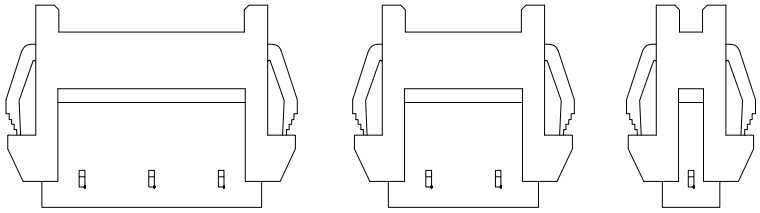

卡点结构示意图

Poles	Dimensions		
	A	B	C
02	2.50	7.50	13.90
03	5.00	10.00	16.40
04	7.50	12.50	18.90
05	10.00	15.00	21.40
06	12.50	17.50	23.90
07	15.00	20.00	26.40
08	17.50	22.50	28.90
09	20.00	25.00	31.40
10	22.50	27.50	33.90
11	25.00	30.00	36.40
12	27.50	32.50	38.90
13	30.00	35.00	41.40
14	32.50	37.50	43.90
15	35.00	40.00	46.40

Version	Content of change	Date	Signature

GENERAL TOLERANCE: 0 ±0.35; .0 ±0.30; .00 ±0.20; .000 ±0.10

JVT 乔业连接器 JVT CONNECTORS

Unit	mm	Scale	1:1	Date	20211201

Approved by	Check	Design	Standard	2.5mm Female HSG With wings Long	
LI	CLYDE	HUANG	P/N	JVT2508HN0-XXWL-LG	
			Map title	237	Version A0