RoHS

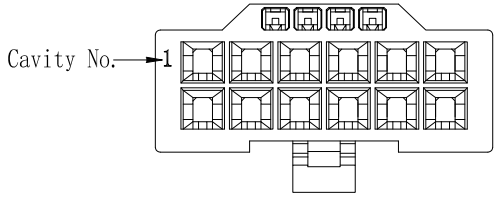

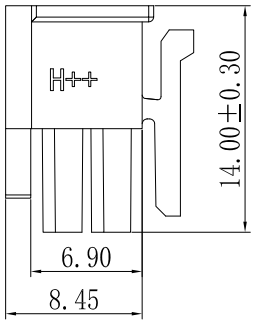

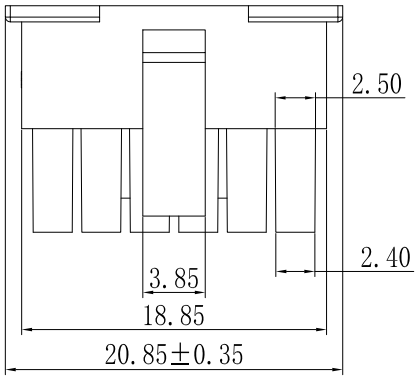

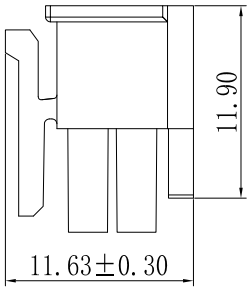

■ SPECIFICATIONS :

- Voltage Rating: 250V AC / DC
- Current Rating: 5A AC / DC
- Withstanding Voltage: 1000V AC/minute
- Temperature Range: -40℃~+105℃
- Insulation Resistance: 1000MΩ Min.
- Contact Resistance: 10mΩ Max.
- *Suitable JVT3025T-C series Terminal
  JVT3025T-D series Terminal
  JVT3026W-12+04 series Wafer

■ *Material:

Material: PA66 UL 94V-0
Color:Black

JVT3025HN0-12+04-C-A

- Logo
- Series NO.
- Housing
- PA66 UL94V-0
- Pin NO.
- C-C Mode
- A-Distinction code

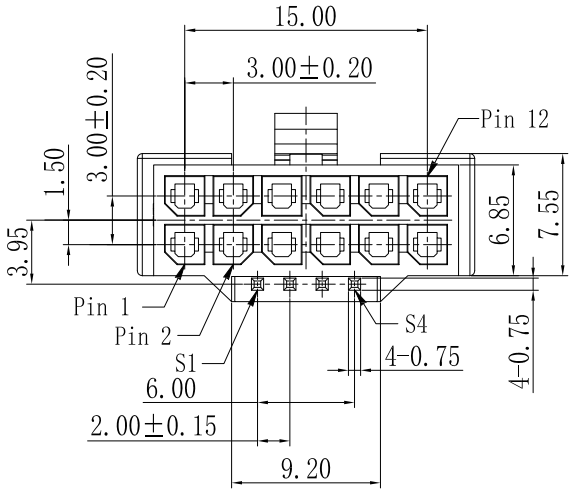

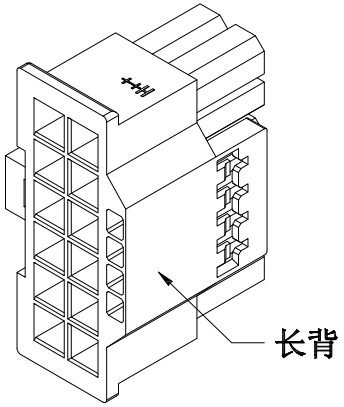

东莞市乔业电子有限公司
WWW.JVT.LTD
2022.01.15
工程发行章

				GENERAL TOLERANCE	JVT 乔业连接器 JVT CONNECTORS					Approved by	Check	Design	Standard	3.0mm+2.0mm-12+04P DUAL ROW HSG			
				0 ±0.35 .0 ±0.30 .00 ±0.25 .000 ±0.10						LI	CLYDE	LU	P/N	JVT3025HN0-12+04-C-A			
Version	Content of change	Date	Signature		Unit	mm	Scale	1:1	Date	20220115			Map title	011	Version	A0	