浙江奥首输送方案PID工艺图

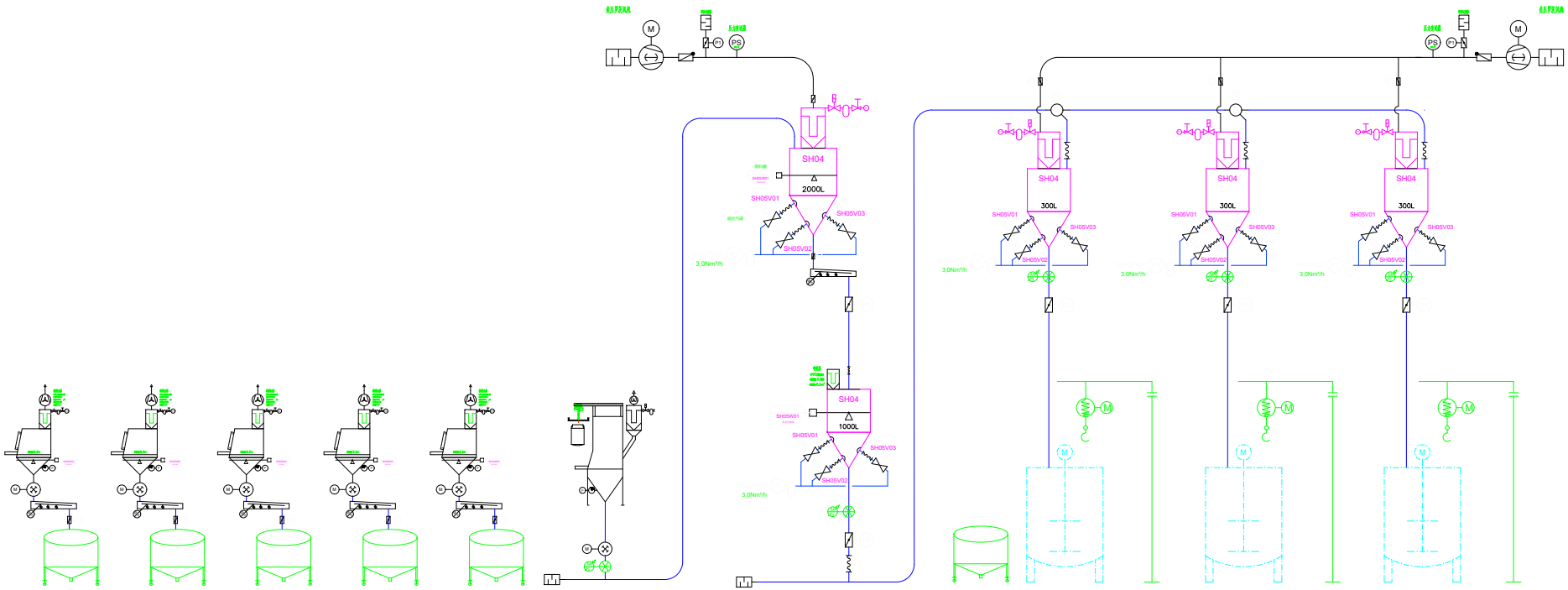

系统简介：

系统设计按可靠，节能为原则参照欧洲标准,关键设备选用欧洲进口设备,罐体国内制作,按照欧洲标准设计检验.自动化控制系统采西门子S7 1200组建.客户端使用11英寸触摸屏,手动CALL料或跟据配方自动送料.

supplied by Wisest	维杰供货
supplied by Wisest	
supplied by Wisest	
supplied by Wisest	
supplied by Wisest	
option	选项设备
supplied by customer	客户设备

广东维杰物料自动化系统有限公司
Guangdong Wijay system company limited

上海田匠智造

ID-Nr. | Date | Name
signed
approved
Scale:
WIJAY System

Index | Alter. No. | Date | Name | Based on: